ASKER

~220-240V 50-60Hz | IP65 | ON OFF | LED | REPLACE



ASKER

4699990003

Remote control not included



ACCESSORY (not included)

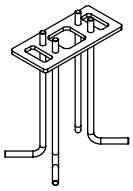

1907xx0009

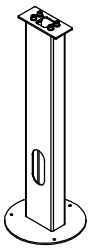

1908xx0009



1909xx0009

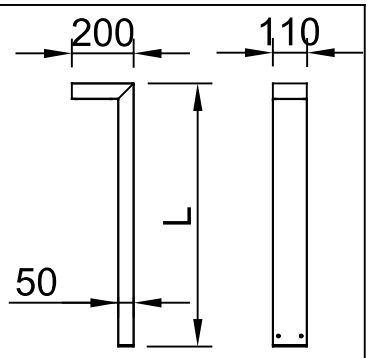

L	[mm]
L1	550
L2	800

LICENSED ELECTRICIAN !!!

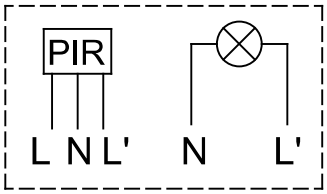

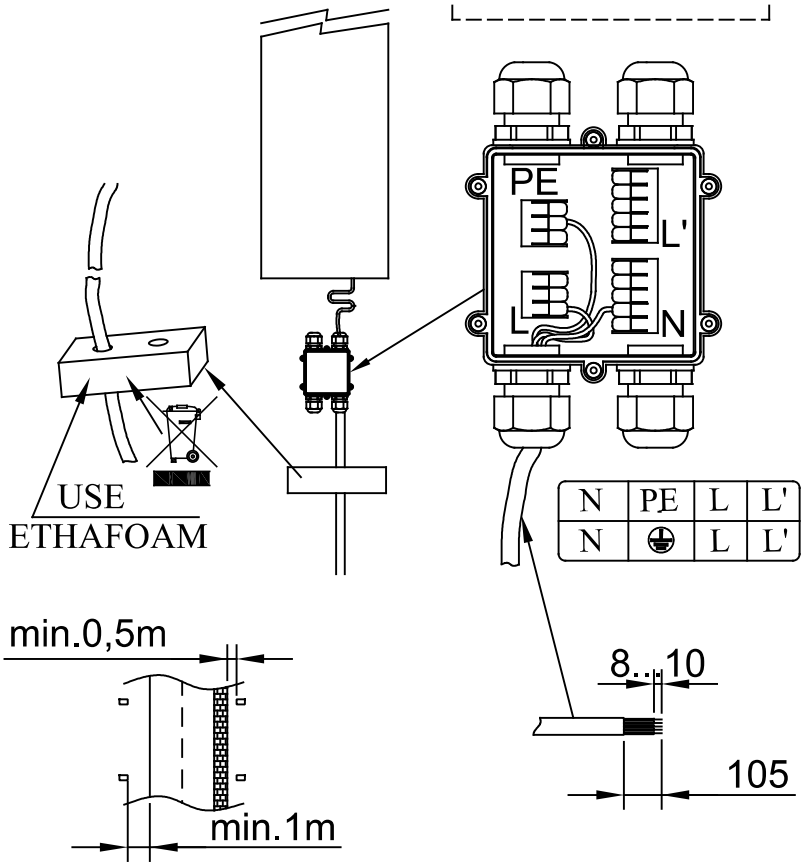

N	PE	L	L'
N	⏚	L	L'

LICENSED ELECTRICIAN !!!

CONCRETE / BETON

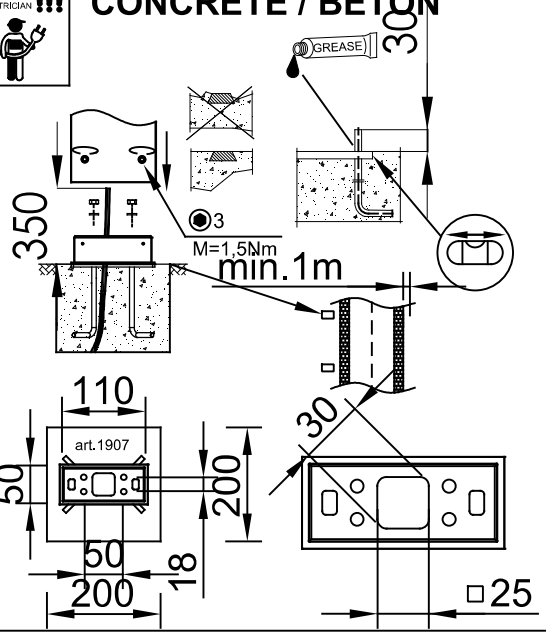

LICENSED ELECTRICIAN !!!

WOOD / BOIS / HOLZ

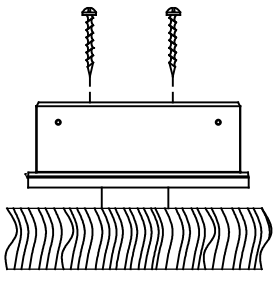

OFF | LICENSED ELECTRICIAN !!!

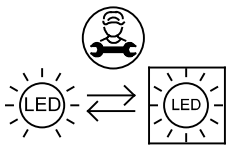

(PL) Moduł LED zintegrowany AC
Wymienne (tylko LED) źródło światła przez profesjonalny serwis

(ENG) LED module AC integrated
Replaceable (LED only) light source by a professional

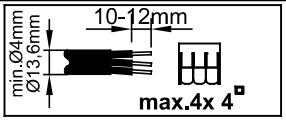

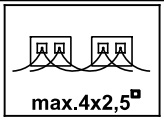

NORLYS

Rev: 06.07.2026

DATA SHEET

MD-C 360i/6 mini

Item number	GTIN
EP10425851	4015120425851

Dimension drawing

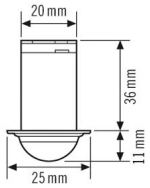

Field of detections

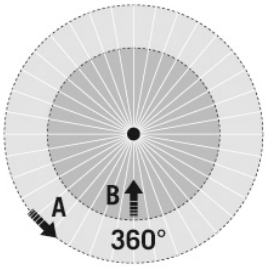

Detection range

Diagonally (A)	Ø 6 m
Frontal (B)	Ø 2 m

Circuit diagram

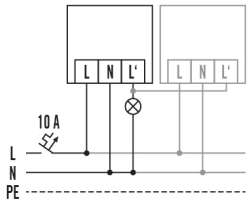

Standard operation with optional parallel wiring of max. eight motion detectors.

Circuit diagram

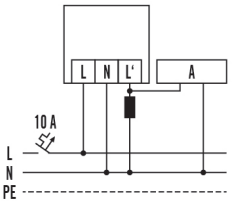

An RC filter (A) may be required when connecting inductors (e.g. relays, contactors, ballasts).

Circuit diagram

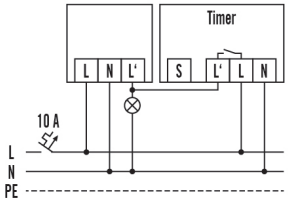

Standard operation with automatic stairwell light.

Circuit diagram

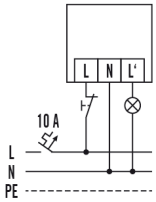

Standard operation with the additional possibility of switching on by hand.

Detailed product description

DATA SHEET

MD-C 360i/6 mini

Item number	GTIN
EP10425851	4015120425851

- Mini motion detector with **360° field of detection** for recessed ceiling and wall mounting for demand-responsive lighting control and therefore noticeable energy cost reductions
- **range of up to 6 m** across for use in small rooms, passageways, toilets, small offices or hallways with very little or no natural lighting
- Default settings ensure immediate operability
- Simple programming using remote control
- Extension of the field of detection with parallel connection of max. 5 detectors
- Small, compact design for an installation hole size of just 20 mm in diameter
- IP 65 version for use particularly in damp rooms
- Fixed cable, 20 cm long
- New universal ESYLUX fastening technology for quick installation in ceilings, brand switch frames, lights, recessed boxes and cupboards, for example
- Recessed ceiling mounting possible in suspended ceilings with supplied spring clips or clamping ring
- Compatible with brand switches if mounted in a wall with supplied clamping ring
- Targeted masking out of areas by means of an enclosed lens mask



(ENG) The light source contained in this luminaire shall only be replaced by the manufacturer or his service agent or a similar qualified person.

(NOR) Installasjon skal utføres av en autorisert installatør/fagmann.

(SWE) All installation skall utföras av auktoriserad elinstallatör.

(DE) Die Montage und der Austausch der in dieser Leuchte enthaltenen Lichtquelle dürfen nur durch den Hersteller oder seinen Kundendienst oder eine gleich qualifizierte Person ausgeführt werden. Bitte lokale Bestimmungen beachten!

(FR) Le montage et le remplacement de la source lumineuse du luminaire doit être fait uniquement par le fabricant, un agent de maintenance ou une personne ayant des qualifications similaires. Merci de respecter la règlementation nationale.

(PL) Źródło światła zastosowane w tej oprawie oświetleniowej powinno być wymieniane wyłącznie przez producenta lub jego przedstawiciela serwisowego, lub podobnie wykwalifikowaną osobę.



(ENG) Turn off the power before replacing the light source.

(NOR) Skru av strømmen før skifte av lyskilde.

(SWE) Koppla bort strömmen innan byte av ljuskälla sker.

(DE) Schalten Sie die Stromversorgung aus, bevor Sie die Lichtquelle austauschen.

(FR) Éteindre le courant avant de remplacer la source lumineuse.

(PL) Wyłącz zasilanie przed wymianą źródła światła.

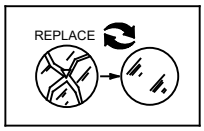

(ENG) Replace any cracked protective screen.

(NOR) Sprukket glass må skiftes

(SWE) Sprucket glas måste bytas.

(DE) Ersetzen Sie jeden beschädigten Schutzschirm.

(FR) Remplacer les écrans de protection fissurés.

(PL) Wymienić każdy pęknięty ekran ochronny.

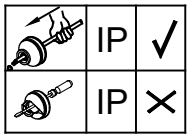

(ENG) Only pierce NORLYS gasket with the installation cable of 7-10,5mm diameter.
Damage caused by tools will lead to IP degradation. Wrong installation leads to loss of warranty.

(NOR) Gjennombor NORLYS-pakning med installasjonskabel ø7-10,5 mm diameter. Skader forårsaket av verktøy vil føre til IP-nedbrytning. Feil installasjon fører til tap av garanti.

(SWE) Använd endast 7-10,5mm Ø kabel för genomträngning av packningar. Skador orsakade av andra typer av verktyg kan sänka IP-klassning på armaturen. Felaktig installation kan orsaka garantiförlust.

(DE) Nur NORLYS Dichtung mit dem Installationskabel eines Durchmessers von 7-10,5mm durchstechen.
Beschädigung durch Werkzeuge führt zu IP Verminderung und Garantieverlust.

(FR)
Percez seulement le joint NORLYS avec le câble d'installation d'un diamètre de 7 à 10,5 mm.
Les dommages causés par des outils entraîneront une dégradation de l'IP et la perte de garantie !

(PL)
Uszczelkę NORLYS Ø7-10,5mm przebijać tylko przewodem instalacyjnym. Przebicie innymi narzędziami powoduje utratę szczelności IP oraz utratę gwarancji.